XOMOX®

brands you trust.

Matryx® Vane Actuators

CRANE®

ChemPharma Flow Solutions

www.cranechempharma.com

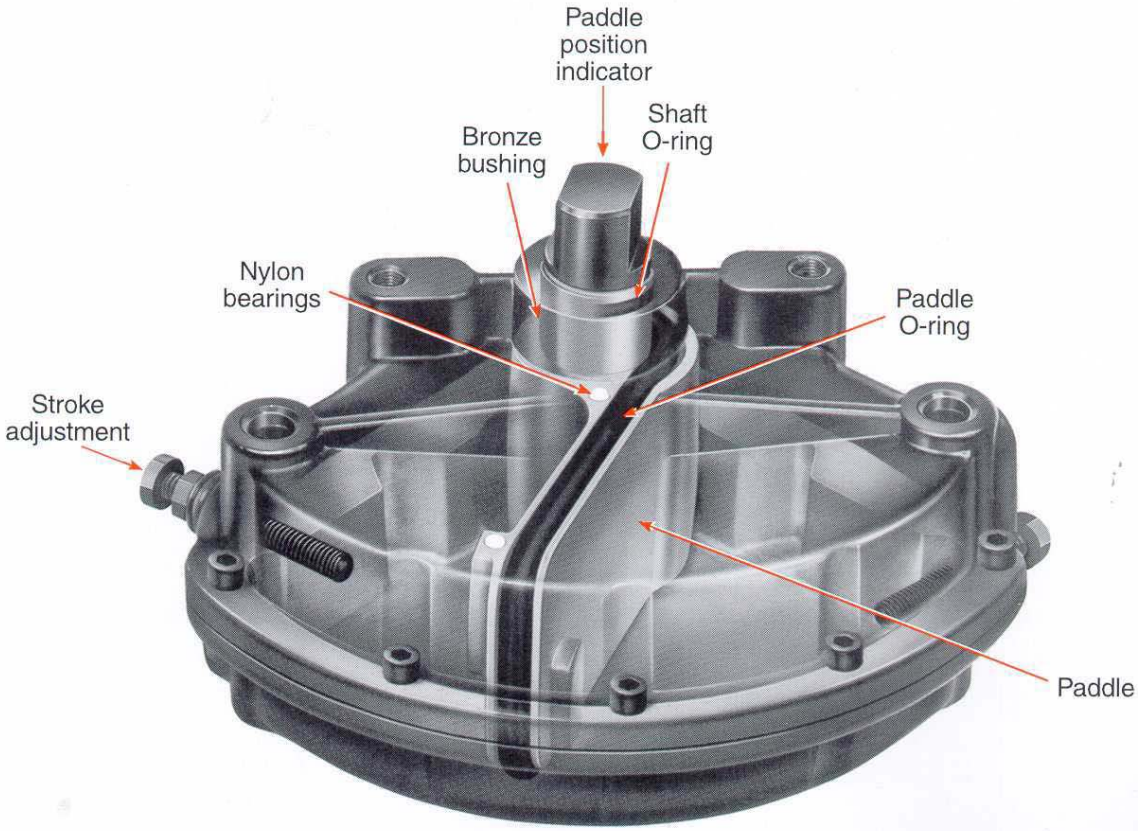

Matryx® Vane Actuators provide unmatched features:

Compact, lightweight, yet powerful.
Matryx Vane Actuators are smaller than other types of actuators in the torque output range of up to 36,000 in-lb. Matryx Vane Actuators produce a high ratio of torque output per pound of actuator weight.

Long life.
Exhaustive factory tests and customer applications have substantiated the long life of Matryx vane actuators.

Durable housing.
The housing is die cast aluminum for maximum strength. The housing is then coated with a high quality alkyd enamel for excellent atmospheric corrosion resistance.

Modular construction.
Accessory control components can be easily added in the field.

Ease of installation.
Matryx vanes are easy to install because of their lightweight, compact design. Mounting kits are available for all types of valves and other devices.

Wide temperature range.
Matryx vanes can operate efficiently from 0° to 225°F. Contact the factory for applications in other temperature ranges.

Simplicity.
Only one moving part, the vane (paddle), is needed to transmit the torque to the valve. Because the paddle is cast directly on the shaft, there is no lost motion during the stroke. This design provides excellent repeatability when used with a positioner.

Uniform seal.
The paddle comes assembled with integral nylon bearings to equalize O-ring compression around the paddle.

Low friction.
The Matryx vanes use Buna-N (Nitrile) O-rings and bronze bushings to minimize friction. The result is a design which is more than 90% efficient in torque output.

Low maintenance.
There are only 3 soft parts which can wear during operation - 1 paddle O-ring and 2 shaft O-rings. These O-rings are easily replaced and are readily available from the factory and all automation centers.

External stroke adjustment.
The Matryx vanes are designed with convenient external travel stops to allow a wide range of rotation adjustment (+/-10 at each end of the stroke).

Available special features.
See page 9 for a description of the options currently available.

© Copyright Xomox Corporation 1979, 2005
All rights reserved. Tufline®, Matryx®, and Xomox® are registered trademarks of the Xomox Corporation
XRP™ is a trademark of Xomox Corporation.

Operating Torques For Double Acting Vane Actuation*

inch-lbs (nm)

MODEL	40 psi (2.7 bar)	60 psi (4.1 bar)	80 psi (5.5 bar)	100 psi (6.8 bar)	120 psi (8.2 bar)
MX60	210	315	450	560	680
	(24)	(36)	(51)	(63)	(77)
MX200	680	1050	1450	1850	2200
	(77)	(119)	(164)	(209)	(249)
MX450	1800	2700	3600	4500	5400
	(203)	(305)	(407)	(508)	(610)
MX750	2660	4100	5325	6900	8350
	(300)	(463)	(602)	(780)	(943)
MX1250	4730	7120	9350	11750	14250
	(534)	(804)	(1056)	(1328)	(1610)
MX3000	12000	18000	24000	30000	36000
	(1356)	(2034)	(2712)	(3389)	(4067)

Operating Torques For 90° Fail-Safe Vane Actuation *

inch-lbs (nm)

MODEL	Position	40 psi (2.7 bar)	60 psi (4.1 bar)	80 psi (5.5 bar)	100 psi (6.8 bar)	120 psi (8.2 bar)
MX60FS	OPEN	210	315	450	560	680
		(24)	(36)	(51)	(63)	(77)
	CLOSE *Beginning*	200	288	412	514	624
		(22)	(33)	(47)	(58)	(71)
	CLOSE *End*	*120*	*175*	*255*	*325*	*400*
		(13)	*(20)*	*(29)*	*(37)*	*(45)*
MX200FS	OPEN	680	1050	1450	1850	2200
		(77)	(119)	(164)	(209)	(249)
	CLOSE *Beginning*	623	960	1330	1700	2000
		(70)	(108)	(150)	(192)	(226)
	CLOSE *End*	*382*	*565*	*815*	*1065*	*1285*
		(43)	*(64)*	*(92)*	*(120)*	*(145)*
MX450FS	OPEN	1800	2700	3600	4500	5400
		(203)	(305)	(407)	(508)	(610)
	CLOSE *Beginning*	1571	2510	3350	4200	5020
		(178)	(283)	(378)	(475)	(567)
	CLOSE *End*	*1181*	*1890*	*2520*	*3150*	*3780*
		(134)	*(214)*	*(285)*	*(356)*	*(427)*
MX750FS	OPEN	2660	4100	5325	6900	8350
		(300)	(463)	(602)	(780)	(943)
	CLOSE *Beginning*	2401	3950	5120	6650	8050
		(272)	(446)	(578)	(750)	(910)
	CLOSE *End*	*1700*	*2725*	*3625*	*4765*	*5820*
		(193)	*(308)*	*(410)*	*(538)*	*(658)*
MX1250FS	OPEN	4730	7120	9350	11750	14250
		(534)	(804)	(1056)	(1328)	(1610)
	CLOSE *Beginning*	4220	6850	9000	11300	13700
		(479)	(774)	(1017)	(1276)	(1548)
	CLOSE *End*	*2710*	*4260*	*5780*	*7400*	*9090*
		(308)	*(481)*	*(653)*	*(836)*	*(1027)*
MX3000FS	OPEN	12000	18000	24000	30000	36000
		(1356)	(2034)	(2712)	(3389)	(4067)
	CLOSE *Beginning*	10000	16500	22000	27500	33000
		(1136)	(1860)	(2480)	(3100)	(3729)
	CLOSE *End*	*6000*	*12000*	*16000*	*20000*	*24000*
		(681)	*(1350)*	*(1800)*	*(2250)*	*(2712)*

* Actuator Sizing:

When sizing an actuator to a valve, damper, or other device, a safety factor should be added to the maximum torque requirement of the device to assure the automated device's operation.

For Double Acting Vane Actuators, the safety factor should be 10%.

For Fail-Safe Vane Actuators, the safety factor should be 20%.

Dimensional Data for Double Acting Vanes

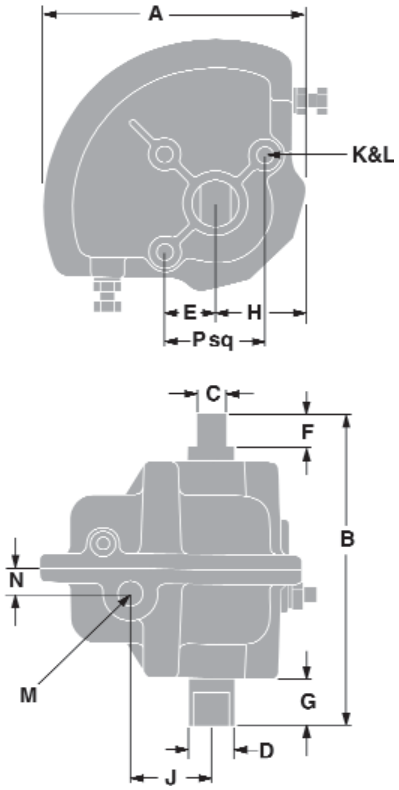

Model MX60

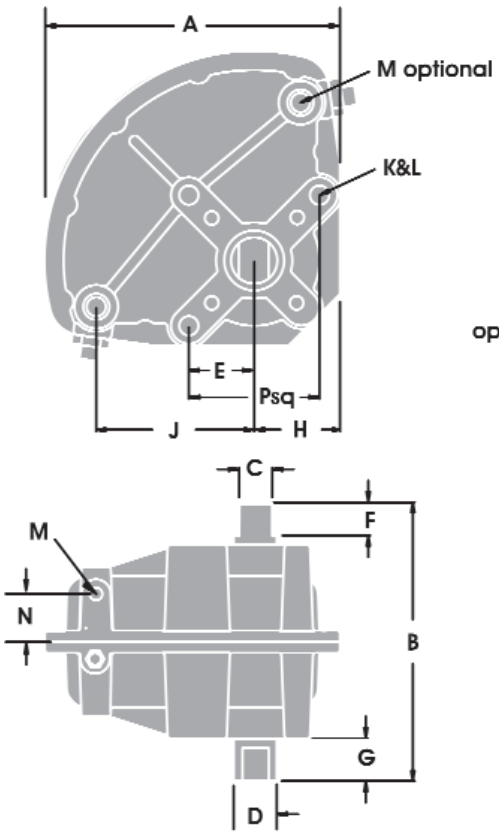

Model MX200

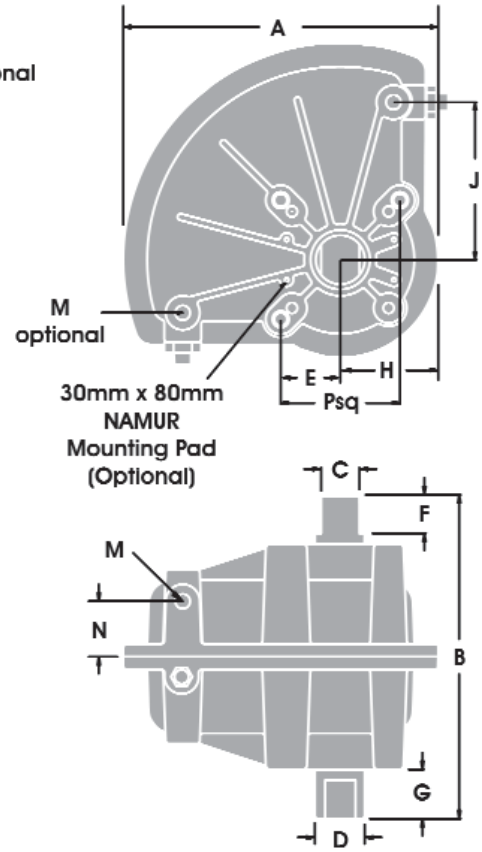

Model MX450

LEGEND

Standard letter designations for double acting vane actuators

A	overall length
B	total height
C	shaft end flats dimension
D	shaft end diameter
E	center line of vane shaft to center line of mounting holes
F	depth of shaft end flats
G	length of the shaft from mounting surface to the end of the shaft
H	center line of vane shaft to right end of vane
J	center line of vane shaft to port center line
K	vane mounting holes dimensions and quantity
L	vane mounting hole depth of thread
M	port size. Alternative port locations available upon request for models MX200, MX450, and MX3000
N	center line of assembled vane to port center line
O	center line of vane shaft to port center line
P	vane mounting holes arrangement
R	accessory mounting hole arrangement
S	center line of vane shaft to center line of accessory mounting hole
T	accessory mounting hole dimension and quantity
U	accessory mounting hole depth of thread

Note: Vane shown in full clockwise position when viewed from top of vane.

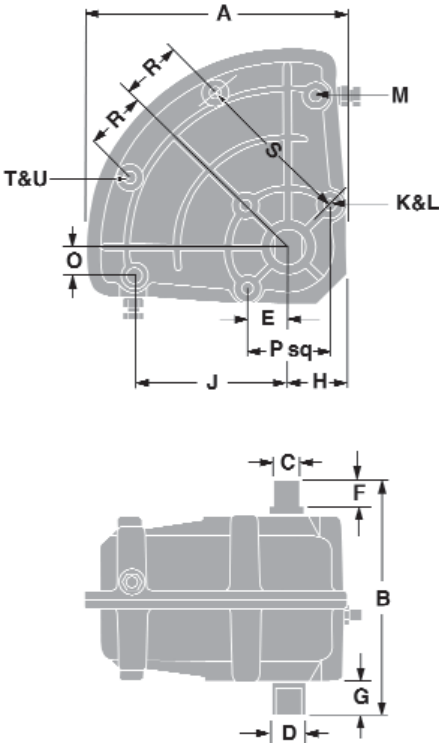

Model MX1250

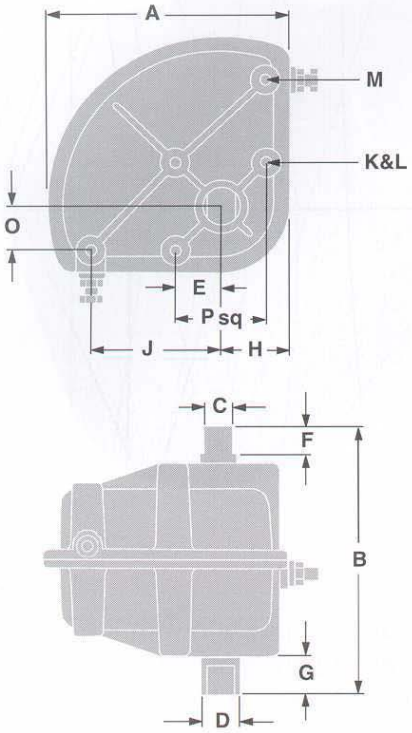

Model MX750

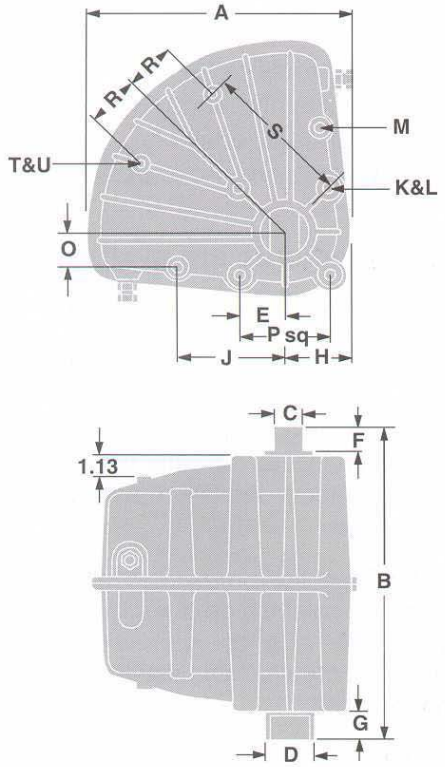

Model MX3000

DIMENSIONS inches (mm)

Models	MX60	MX200	MX450	MX750	MX1250	MX3000
A	4.87	6.94	9.25	9.31	10.88	13.62
	(124)	(176)	(235)	(236)	(276)	(346)
B	5.88	6.56	9.56	10.50	10.00	16.63
	(149)	(166)	(243)	(267)	(254)	(422)
C *	.563	.750	1.124	1.125	1.125	1.500
	(14.3)	(19.0)	(28.6)	(28.6)	(28.6)	(38.1)
D *	.875	1.064	1.437	1.442	1.442	2.495
	(22.2)	(27.0)	(36.5)	(36.6)	(36.6)	(63.4)
E	.94	1.50	1.75	1.75	1.75	2.30
	(24)	(38)	(44)	(44)	(44)	(58)
F *	.63	.75	1.13	1.13	1.13	1.31
	(16)	(19)	(29)	(29)	(29)	(33)
G *	.91	1.00	1.50	1.50	1.50	1.56
	(23)	(25)	(38)	(38)	(38)	(39)
H	1.69	2.13	2.88	2.63	2.50	3.46
	(43)	(54)	(74)	(67)	(63)	(88)
J	1.50	3.62	4.63	5.00	6.38	5.50
	(38)	(92)	(118)	(127)	(162)	(140)
K * [UNC]	5/16-18	3/8-16	1/2-13	1/2-13	1/2-13	3/4-10
qty	3	3	3	3	3	4
L *	.50	.56	.81	.75	.62	1.50
	(13)	(14)	(21)	(19)	(16)	(38)
M * [NPT]	1/4-18	1/4-18	1/4-18	1/4-18	3/8-18	3/8-18
qty	2	4	4	4	4	4
N	.50	.94	1.63	-----	-----	-----
	(13)	(24)	(41)	-----	-----	-----
O	-----	-----	-----	1.75	1.19	1.88
	-----	-----	-----	(44)	(30)	(48)
P *	1.88	3.00	3.50	3.50	3.50	4.60
	(48)	(76)	(89)	(89)	(89)	(117)
R *	-----	-----	-----	-----	2.50	2.63
	-----	-----	-----	-----	(63)	(67)
S *	-----	-----	-----	-----	6.63	7.69
	-----	-----	-----	-----	(168)	(195)
T * [UNC]	-----	-----	-----	-----	1/2-13	1/2-13
qty	-----	-----	-----	-----	2	2
U *	-----	-----	-----	-----	.62	.56
	-----	-----	-----	-----	(16)	(14)

* Typical on both top and bottom of actuator

WEIGHTS

lbs	3	7	14	18	22	65
kg	(1.4)	(3.2)	(6.4)	(8.2)	(10.0)	(29.6)

Fail-Safe Vane Actuators

Matryx Fail-Safe Vane Actuators utilize an air accumulator to assure valve closure, regardless of air pressure droop (temporary low air pressure). The accumulator design makes Matryx vanes 100% positively fail-safe because they will fail instantaneously when air pressure is lost or falls below a predetermined minimum air setting. The Matryx pneumatic Fail-Safe systems have been field tested and proven reliable under a variety of service conditions.

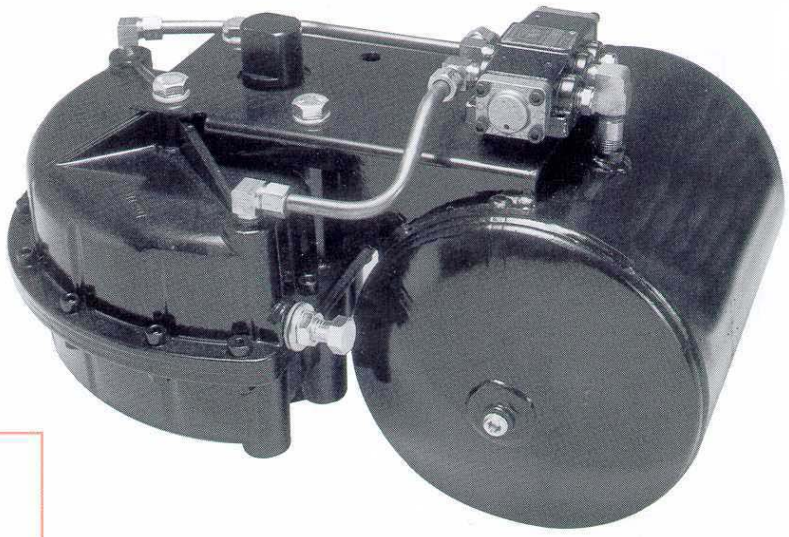

Fail-Safe Arrangement 1* (FS1)

(Fail-Safe on ***air*** failure)

As air (above 45 psig) is admitted to the 4-way air operated pilot valve, it switches, and air moves the vane 90° and also charges the accumulator. When air drops below 15 psig, the pilot switches, allowing accumulator air to move the vane 90° to the "safe" position.

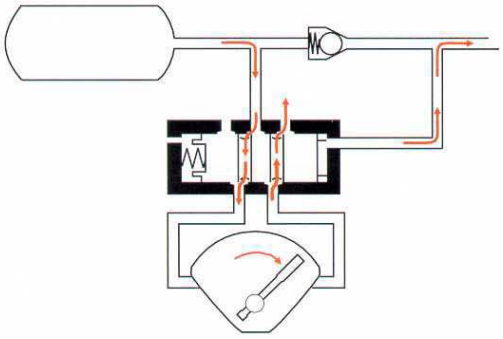

Fail-Safe Arrangement 2* (FS2)

(Fail-Safe on ***air or electric*** failure)

This is identical to Arrangement 1 except that a 3-way solenoid valve** controls air supply to pilot valve. On loss of air pressure, the pilot switches to the "safe" position. On electrical failure, the solenoid de-energizes, exhausting the air from the pilot valve. Explosion-proof is available.

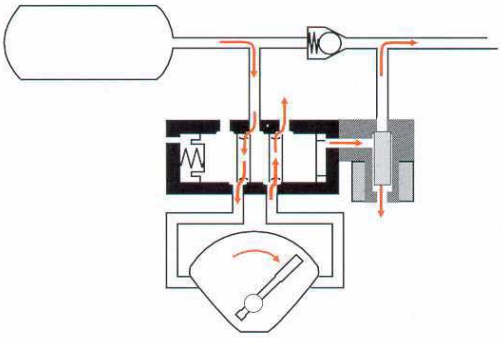

**Solenoid valve may be integral as shown or separate from pilot valve.

FEATURES

- No spring drift. No change in position with the normal droop in plant air supply pressure. Spring actuators "drift" as the air supply droops.
- Cost savings. In some cases, the Matryx system is less than half the cost of a comparable spring return unit.
- Remote mounting capability. The Matryx Fail-Safe system can easily be mounted remotely on a nearby wall or structural support.
- A safer system. No special tools or safety enclosures are needed for maintenance, like some spring actuators. For safe, easy maintenance, the tank is simply depressurized.

*Other Fail-Safe arrangements are available.

Fail-Safe arrangement 3 will function on ***air or electric*** failure (like the FS2) but also incorporates a pressure switch to monitor the air supply. If pressure drops below the pressure switch setting, the switch opens and the solenoid is de-energized, switching to the "safe" position. Accumulator air then moves the vane 90°, pressure switch resets 10 psi above the failure setting, and normal operation resumes.

Fail-Safe arrangement 4 will function on ***electric*** failure only. On electrical failure, the solenoid de-energizes and moves the actuator to the "safe" position. If there could be air failure with no effect on the electrical service, this arrangement should not be used.

Consult the factory for questions regarding your specific application.

Fail-Safe (FS) Vane Dimensions

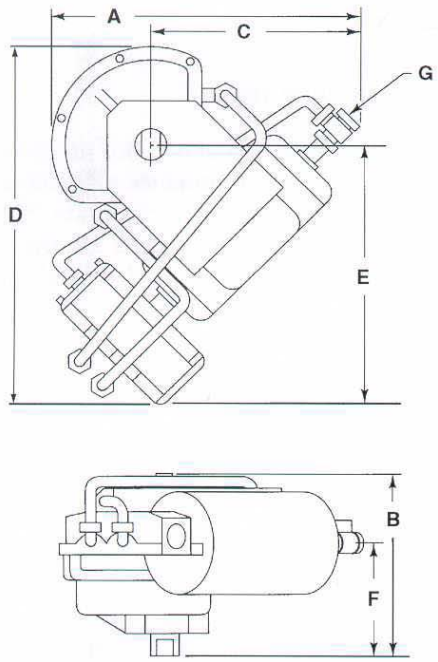

MX60FS

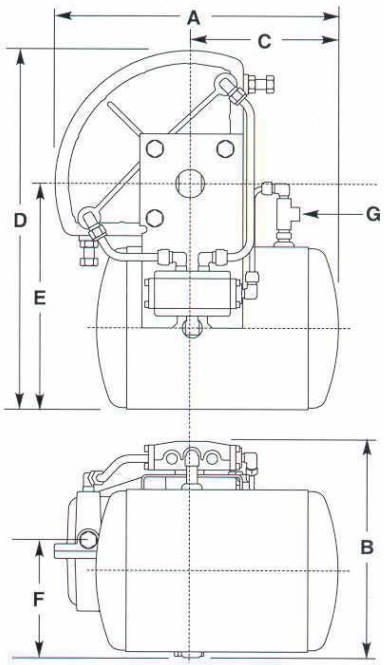

MX200FS - MX3000FS

90° Matryx Fail-Safe Actuator Dimensions inches (mm)

Model	A	B	C	D	E	F	G [NPT]	Tank Volumes* Cu.In.
MX60FS	8.94 (227)	5.88 (149)	5.69 (115)	11.18 (284)	8.00 (203)	3.50 (89)	1/4-18 1/4-18	40
MX200FS	11.75 (298)	7.63 (194)	6.88 (175)	13.63 (347)	8.81 (224)	3.63 (92)	1/4-18 1/4-18	95
MX450FS	14.69 (373)	9.93 (245)	8.00 (203)	16.88 (429)	10.50 (267)	4.38 (111)	1/4-18 1/4-18	302
MX750FS	14.75 (375)	10.50 (267)	8.00 (203)	18.68 (475)	12.00 (305)	4.25 (108)	1/4-18 1/4-18	542
MX1250FS	21.00 (534)	10.88 (276)	12.50 (318)	20.38 (518)	12.00 (305)	3.75 (95)	1/4-18 1/4-18	634
MX3000FS	22.38 (568)	16.68 (424)	10.13 (257)	26.18 (665)	16.00 (406)	8.38 (213)	1/4-18 1/4-18	1963

The dimensions above are for Fail-Safe Arrangement 1 models. Contact factory for other arrangements.
*Tank volume represents enough capacity to stroke the actuator 1 time at listed torque.

Weights *

Model	MX60FS1	MX200FS1	MX450FS1	MX750FS1	MX1250FS1	MX3000FS1
lbs	18	24	28	37	40	102
kg	(8)	(11)	(13)	(17)	(18)	(47)

*For FS Arrangement 2 units, add 1 lb. to the weights shown for FS1 models.

180° Matryx Vane Actuators

Models MX60-180 through MX3000-180.

Matryx 180° actuator systems make use of two 90° actuators and two solenoid valves to eliminate the need for a positioner or elaborate limit switch setup to control stopping at the 90° position. The output torques of the 180° actuators are the same as the 90° units. Available in weatherproof or explosion proof construction.

180° systems can also be supplied as fail-safe units. Fail-safe versions can be constructed to fail in any of the 3 positions shown; however, position 2 (90°) is the standard fail position.

Position 1 (0°)

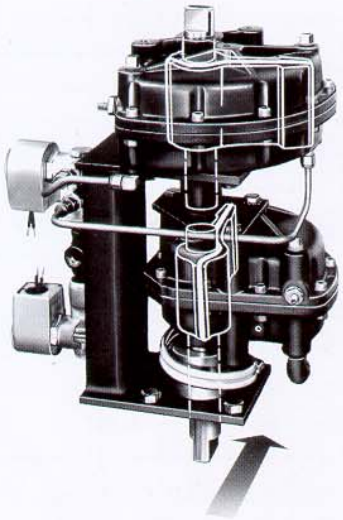

Position 2 (90°)

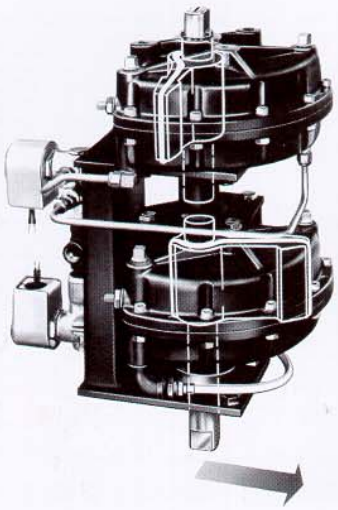

Position 3 (180°)

Operation:

Three position control is obtained by the use of two 4-way solenoid valves.

To obtain position 1 (full counterclockwise), the top solenoid is energized. To obtain position 2 (center), neither solenoid is energized. For position 3 (full clockwise), the bottom solenoid is energized.

180° movement is obtained by adding the 90° stroke of both actuators. The upper unit rotates the housing of the lower unit 90°. The vane of the lower unit then rotates 90° within its housing, so the result is 180°.

Chemical resistant plastic tubing provides flexible air connection to the lower actuator.

Options & Direct Mount Configuration

Optional Materials & Applications

Matryx Vanes can be supplied with special materials to meet your application requirements. Some examples include:

- ***Extended travel stop screws***
- ***Custom exterior coatings***
- ***PTFE interior coatings***
- ***High or low temperature trim***
- ***Special greases***
- ***Hydraulic units***

Contact the factory to discuss special applications.

Direct Mount Vane Actuators

Direct mounting offers a number of benefits:

- ***Eliminates costly brackets and couplings.***
- ***Speeds the assembly to valves.***
- ***Reduces the height of valve assemblies.***
- ***Eliminates lost motion due to worn couplings.***

Direct mountable Matryx Vane Actuators can be supplied in a variety of socket styles including: double D, square, rectangular, and keyed. Custom shapes can also be provided (refer to the schematic below for design parameters). Direct mount sockets can be provided on one or both ends of the actuator shaft.

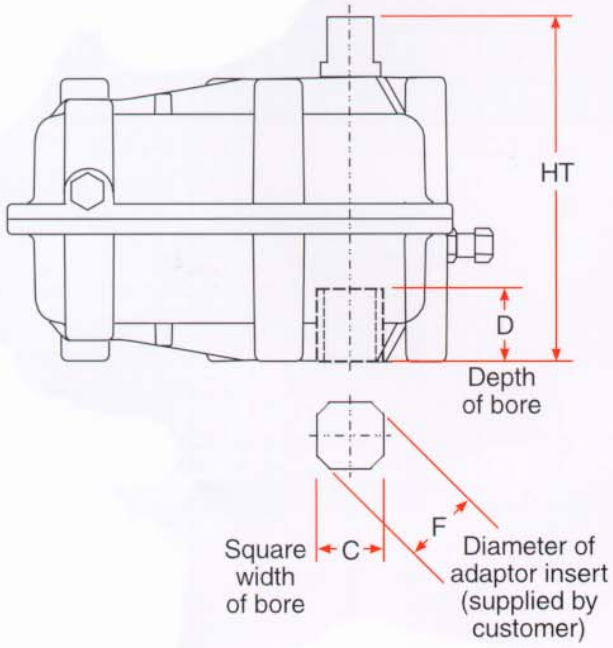

Dimensions for Direct Mounted Vanes inches

Model	C	D	F	HT
MX60DM	.506/.503	1.00	.545	4.97
MX200DM	.632/.628	1.25	.826 MAX	5.56
MX450DM	.882/.878	1.50	1.000	8.13
MX750DM	.882/.878	1.50	1.000	9.00
MX1250DM	1.004/1.000	1.75	1.190	8.50
MX3000DM	1.630/1.625	2.00	2.093/2.000	15.08

Performance Characteristics & Materials Of Construction

Performance Characteristics

Pressure: Matryx Vanes are designed to operate between 40-120 psig.

Maximum supply pressure: 120 psig.

Temperature: All standard trim Matryx Vanes will operate in an ambient temperature range from 0° to 225° F (-17° to 107°C). Consult factory for applications beyond this range.

Speed of operation: The stroking speed of an actuator depends on a number of variables like valve type, pipeline flow conditions, size & length of air supply lines, air supply volume and pressure, etc. Normal stroke times range from 1-4 seconds. Consult factory for stroke times required outside of this range.

Operating media: Air or any non-corrosive gas. Consult factory when considering other operating media (water, hydraulic oil, etc.). For applications where extremely dry, non-lubricated air is used, special trim (O-rings and lubricants) may be required.

Model	Air Consumption (Cubic inches per 90°)	Stroke Adjustment	
		Min.*	Max.
MX60	13.5	75°	112°
MX200	41.0	74°	110°
MX450	110.0	80°	110°
MX750	146.0	80°	110°
MX1250	232.0	80°	102°
MX3000	630.0	80°	98°

* Requires optional extended travel stop screws.

Materials of Construction

Housing	Die cast aluminum
Coating (external)	Alkyd enamel
Vane O-ring	Buna-N (Durometer 50)
Shaft O-rings (2)	Buna-N (Durometer 70)
Vane	Die cast aluminum
Shaft	Carbon steel
Bushings (2)	660 phosphor bronze
Lubricant*	Dubois MPG-2 Petroleum based grease
Housing sealer	RTV silicone rubber
For Fail Safe Models	
Accumulator tank	Steel
Check valve	Brass
Pilot control valve	Die cast aluminum

* Grease does not contain silicone when utilizing Buna-N or Viton seals. EPDM seals utilize silicone based grease.

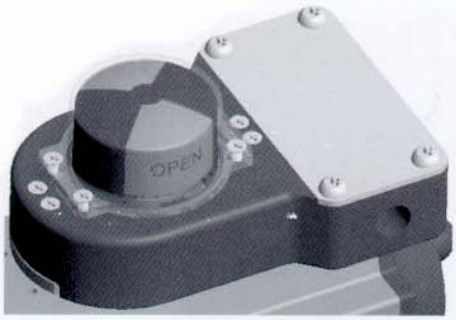

TUFSWITCH – Demanding, All Area Capability

- Epoxy coated aluminum housing
- 3D position indicator
- Very low profile design
- Direct actuator mounting w/integral mounting kit
- Magnetic targets are isolated and sealed
- Top actuator shaft is protected from contaminants
- NEMA 4, 4x, 6p, 7 & 9
- Non-incentive and intrinsically safe options
- Proximity or inductive switches only
- Three position dribble control option
- 4 to 20mA feedback transmitter option
- **A**ctuator **S**ensor **i**nterface option

ASi interface

MCR Series – Economical – General Purpose

- Engineered resin housing
- 3D position indicator
- Designed for use in NEMA 4, 4x environments
- General purpose and intrinsically safe options
- Mechanical or inductive switches

MCA Series – Conventional w/Multiple Options

- Epoxy coated aluminum or stainless steel housing
- 3D, Disk or No position indication
- NEMA 4, 4x, Class I Division 2 & intrinsically safe
- Mechanical, proximity or inductive switches
- World's first wireless option
- Three position dribble control option
- 4 to 20mA feedback transmitter option
- **A**ctuator **S**ensor **i**nterface option

ASi interface

MXA Series – Explosion Proof

- Epoxy coated aluminum housing
- 3D position indicator
- NEMA 4, 4x, 7 & 9
- Non-incentive and intrinsically safe options
- Mechanical, proximity or inductive switches
- Three position dribble control option
- 4 to 20mA feedback transmitter option
- **A**ctuator **S**ensor **i**nterface option

ASi interface

Xomox Sizing Program

- Build Projects
- Quote Projects
- Quick Actuator Sizing
- ISA Style Data Sheets
- Multiple Valve Sizing
- Simplified Valve Flow Sizing
  - Liquid
  - Gasses
  - Steam
- Common Engineering Performance Calculations
- Accumulator Tank Sizing
- Speed Of Operation
- Hot Line Mounting Kit Sizing

CRANE ChemPharma Flow Solutions™
4444 Cooper Road, Cincinnati, OH 45030

Tel: (513) 745-6000
Fax: (513) 745-6086

www.xomox.com
www.cranechempharma.com

brands you trust.

CRANE Chempharma Flow Solutions Include: Pipe - Valves - Fittings - Actuators - Pumps

© 2009 CRANE ChemPharma Flow Solutions, www.cranechempharma.com

PN329738 - 09/05 2M C&O Printed in USA